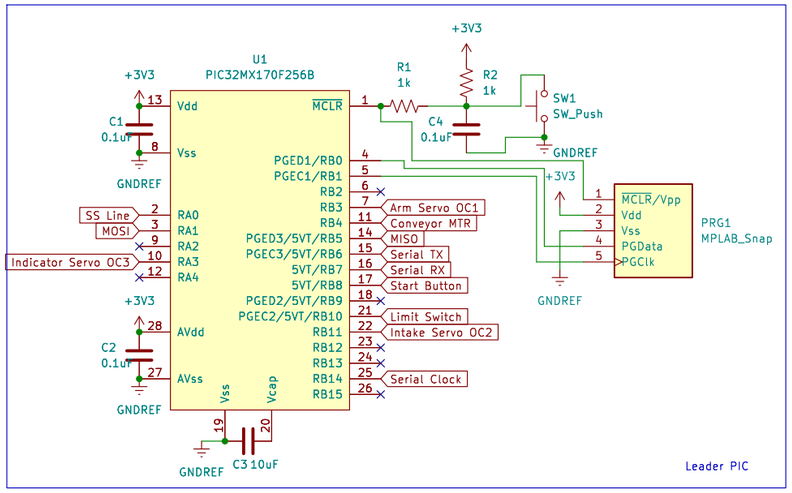


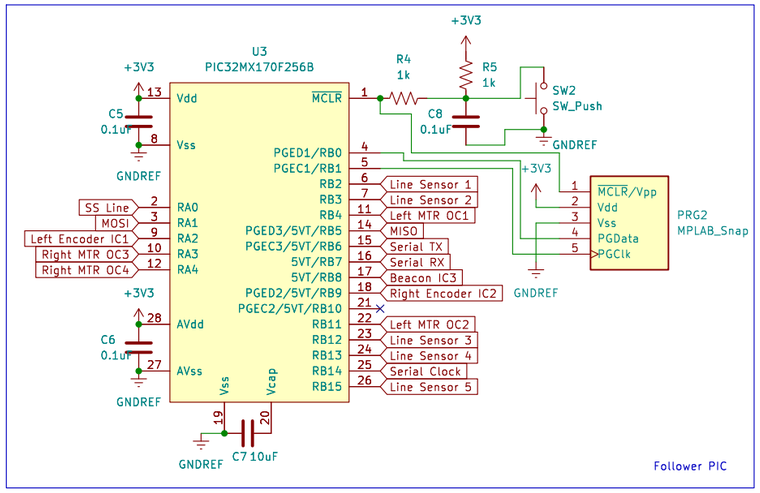


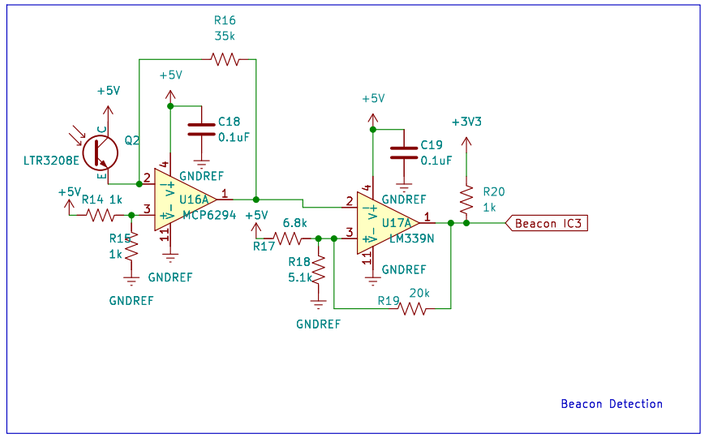


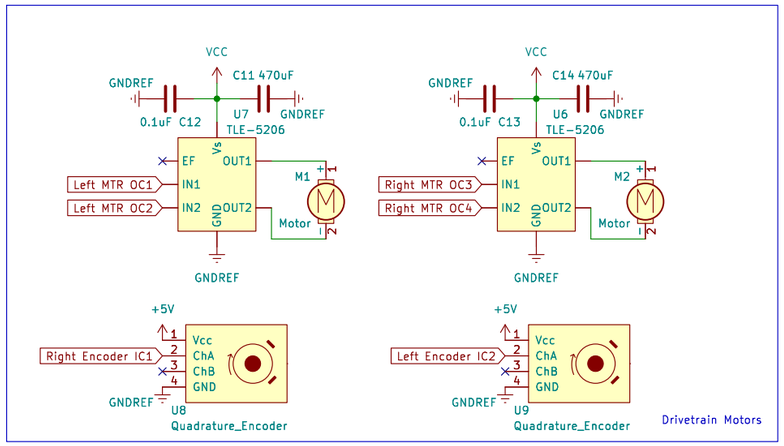


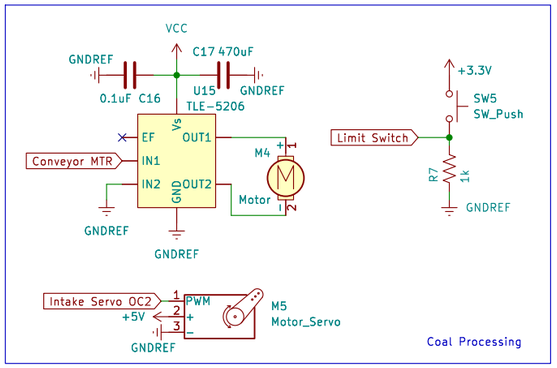


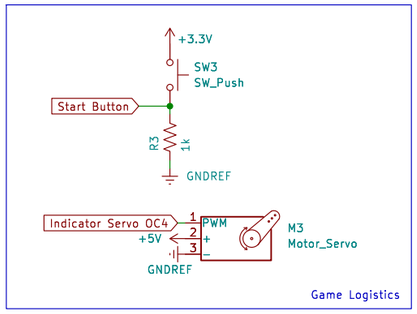


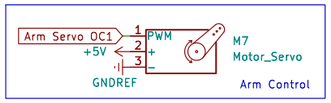


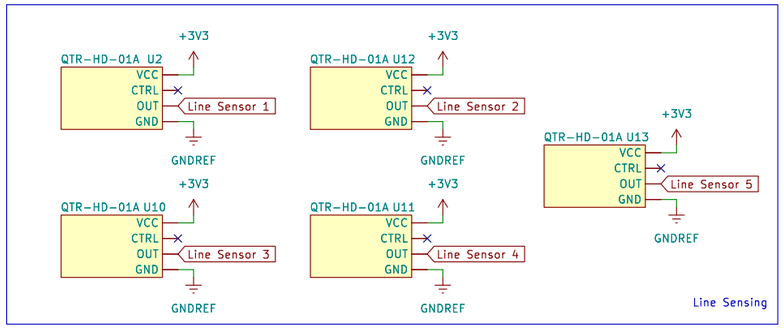


Sheet: /
File: Project.kicad_sch

**Title: ME218B Project Schematic**

| | | |
|---|---|---|
| Size: A3 | Date: 2026-03-09 | Rev: 02 |
| KiCad E.D.A. eeschema 7.0.11 | | Id: 1/1 |